Building Plans & Specifications

for the

Garage Annex

featured in the book

Your Garagenous Zone: Innovative Ideas

for the

Garage

Garage Annex Designed by
Jay Behm
www.BehmDesign.com

The Garage Annex adds functionality and storage beyond your garage.

Building Materials List for Side Shed

~ Local building code approved substitutions may be made to this list ~

Variations in construction methods and materials can require modification of this list.

Concrete & Reinforcements For Monolithic Slab/Footing

Poured-in-place concrete----------	*23.7 cu. ft.*	*.88 cy*
#4 Reinforcing Steel Bar ASTM A-615 grade 40		*1 - 20' pc.*

Rough Framing

2 x 4 x 92-1/2" HF/DF "stud" wall framing ----------		*24 pcs.*
2 x 4 x 96" HF/DF No. 2 for plates , header, subrakes & rafters------		*16 pcs.*
2 x 4 x 96" HF/DF No. 2 pressure-treated mudsill ----------		*3 pcs.*
2 x 4 x 22-1/2" Eave Blocking with screened vent holes----------		*8 pcs.*

Sheathing Materials

1/2" 5-ply C-D APA Plywood, ext. glue P.I. 24/0 Roof	*4 x 8 sheet*	*3 sheets*

Siding Materials

7/16" o.s.b. text. (or 5/8" T1-11 plyw'd) panel siding	*4 x 8 sheet*	*6 sheets*
Cedar Trim: 1 x 4 ----------	*8' length*	*7 pcs.*
Cedar Trim: 1 x 3 ----------	*8' length*	*2 pcs.*
Cedar Fascia: 1 x 6 ----------	*12' length*	*1 pc.*
Cedar Rakeboard: 2 x 6 ----------	*8' length*	*2 pcs.*

Roofing Materials

Composition Roofing Shingles----------	*65 sf*	
Flashing for roof at wall ----------		*10 lf*

Window and Door Assemblies

3068 exterior door----------		*ea.*

Metal Parts & Misc.

Anchor bolts: 1/2" dia. x 8" ASTM A-307/A-325, type X w/ hex nuts--		*6 pcs.*
Flat washer: 2" x 2" square x 3/16" thick----------		*6 pcs.*
Z-flashing strip for panel siding		*10 lf*

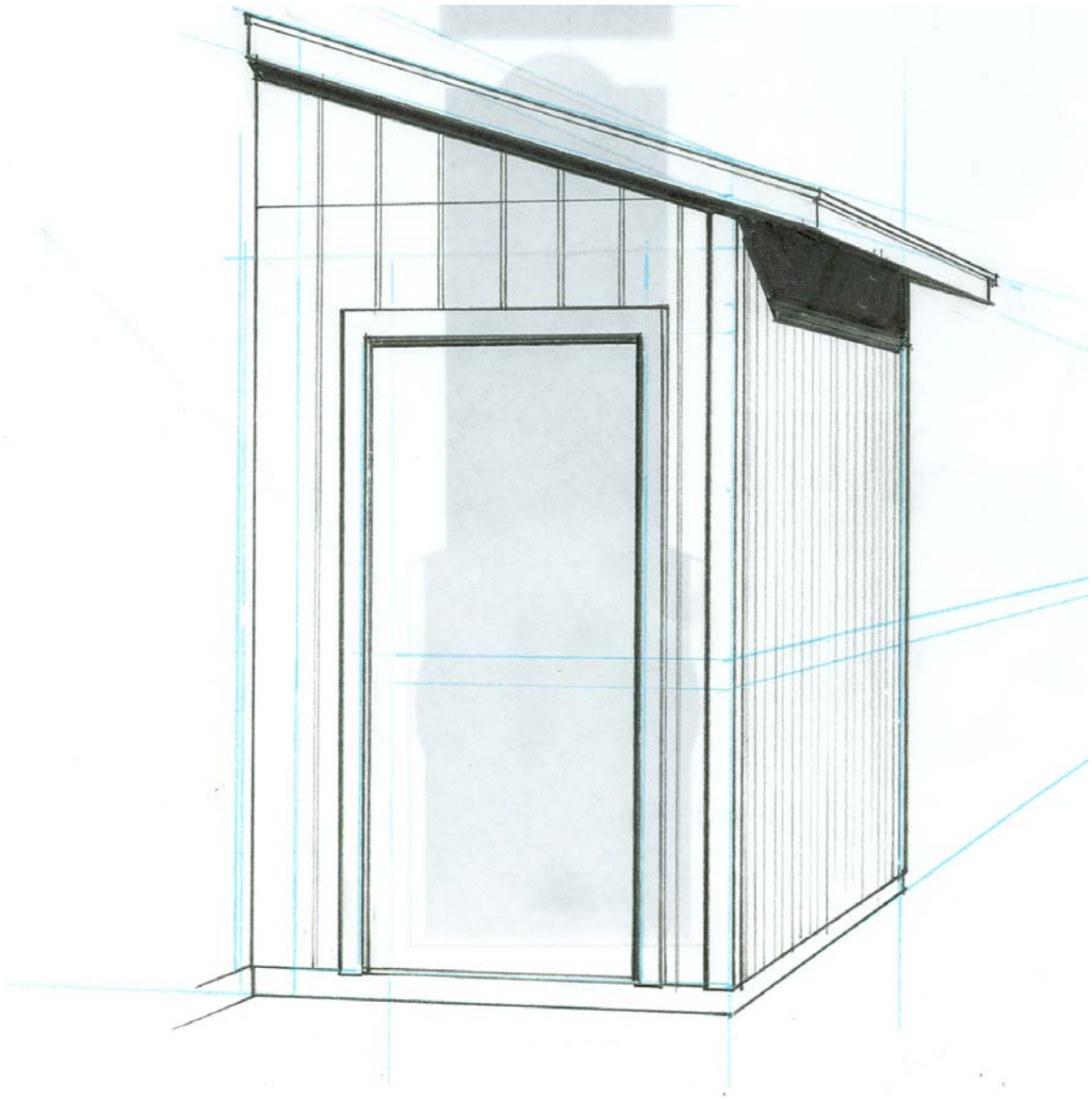

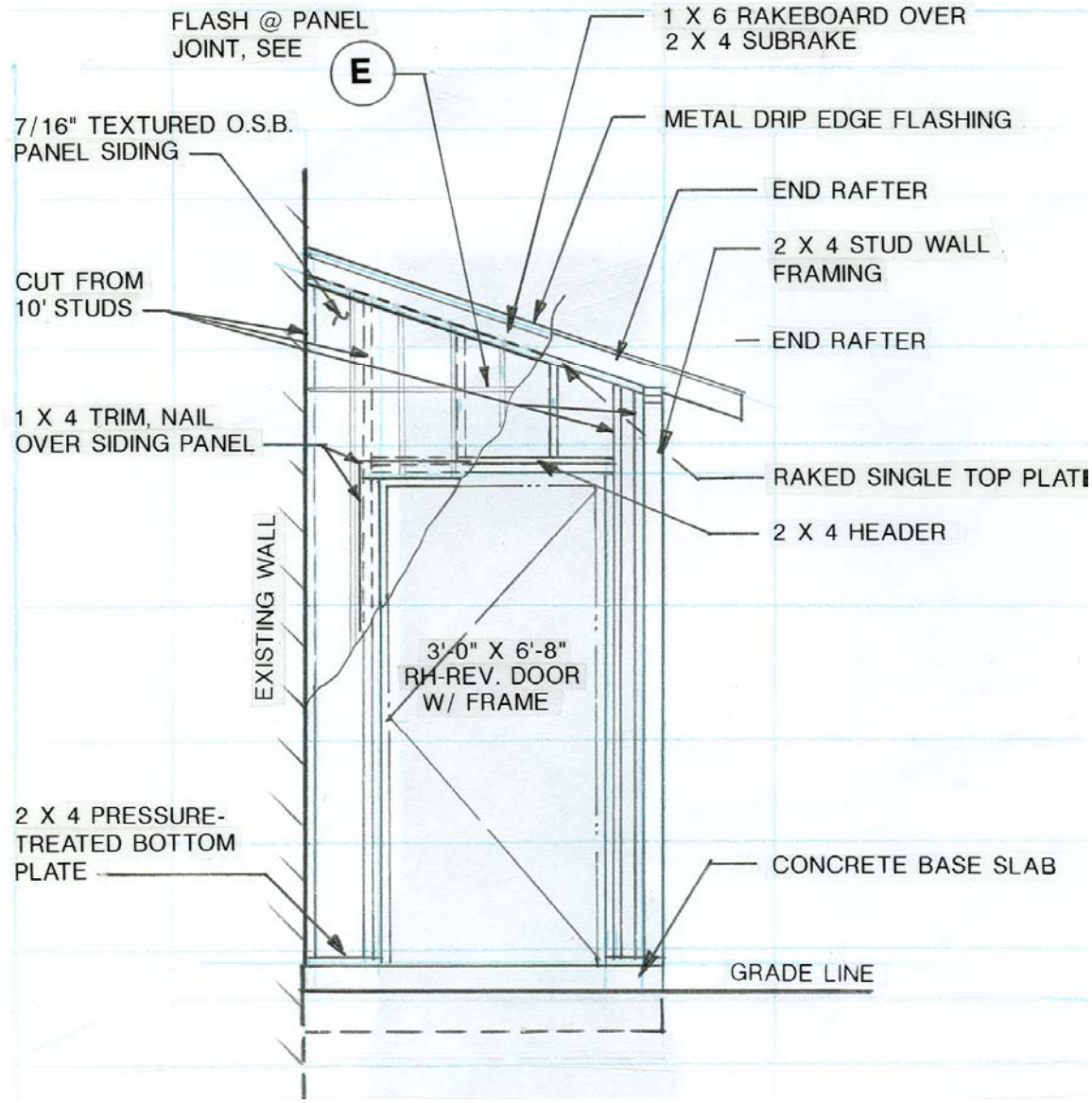
FLASH @ PANEL
JOINT, SEE
E
1 X 6 RAKEBOARD OVER
2 X 4 SUBRAKE
7/16" TEXTURED O.S.B.
PANEL SIDING
METAL DRIP EDGE FLASHING
END RAFTER
2 X 4 STUD WALL
FRAMING
CUT FROM
10' STUDS
END RAFTER
1 X 4 TRIM, NAIL
OVER SIDING PANEL
RAKED SINGLE TOP PLAT
2 X 4 HEADER
EXISTING WALL
3'-0" X 6'-8"
RH-REV. DOOR
W/ FRAME
2 X 4 PRESSURE-
TREATED BOTTOM
PLATE
CONCRETE BASE SLAB
GRADE LINE

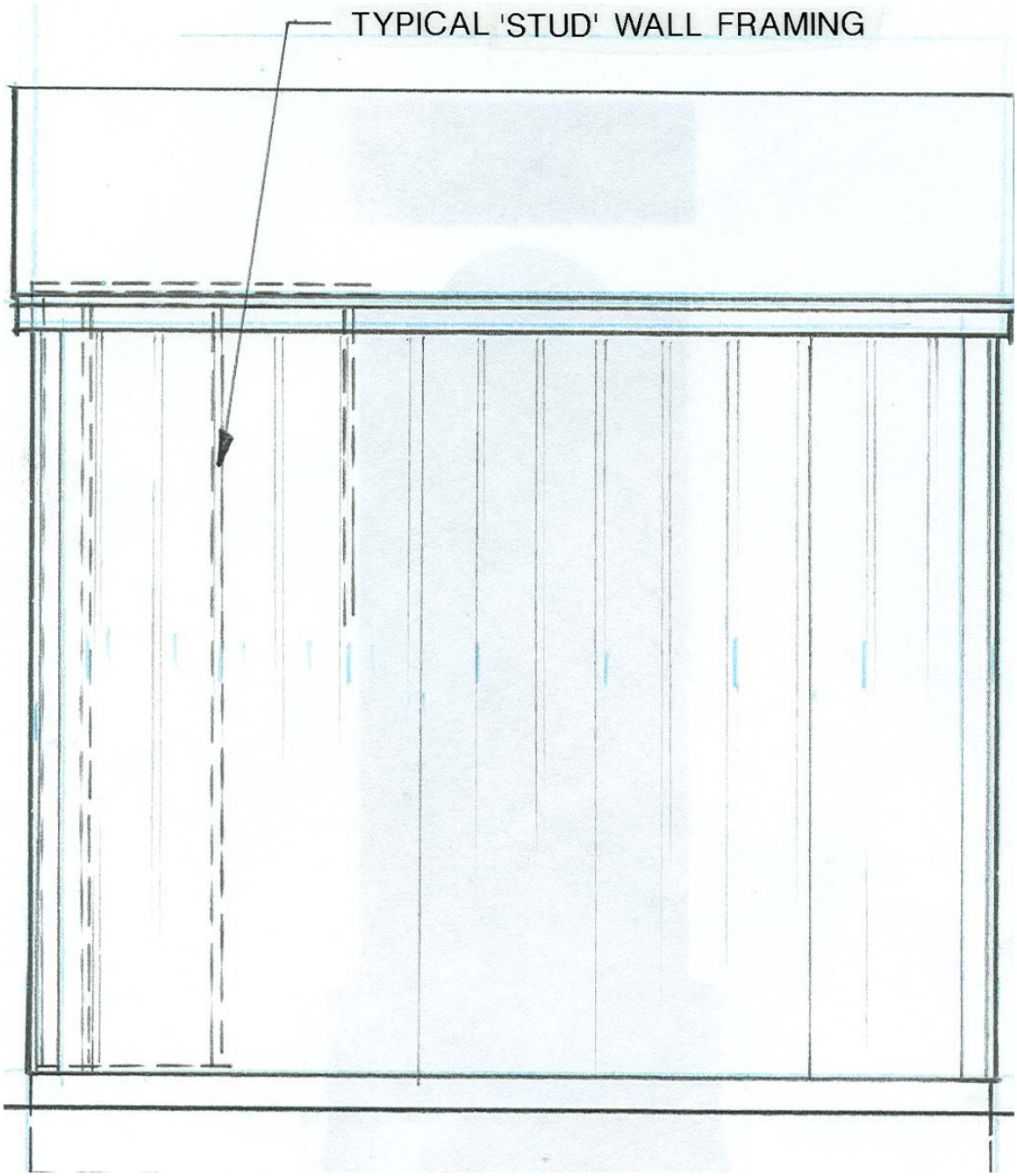
TYPICAL 'STUD' WALL FRAMING

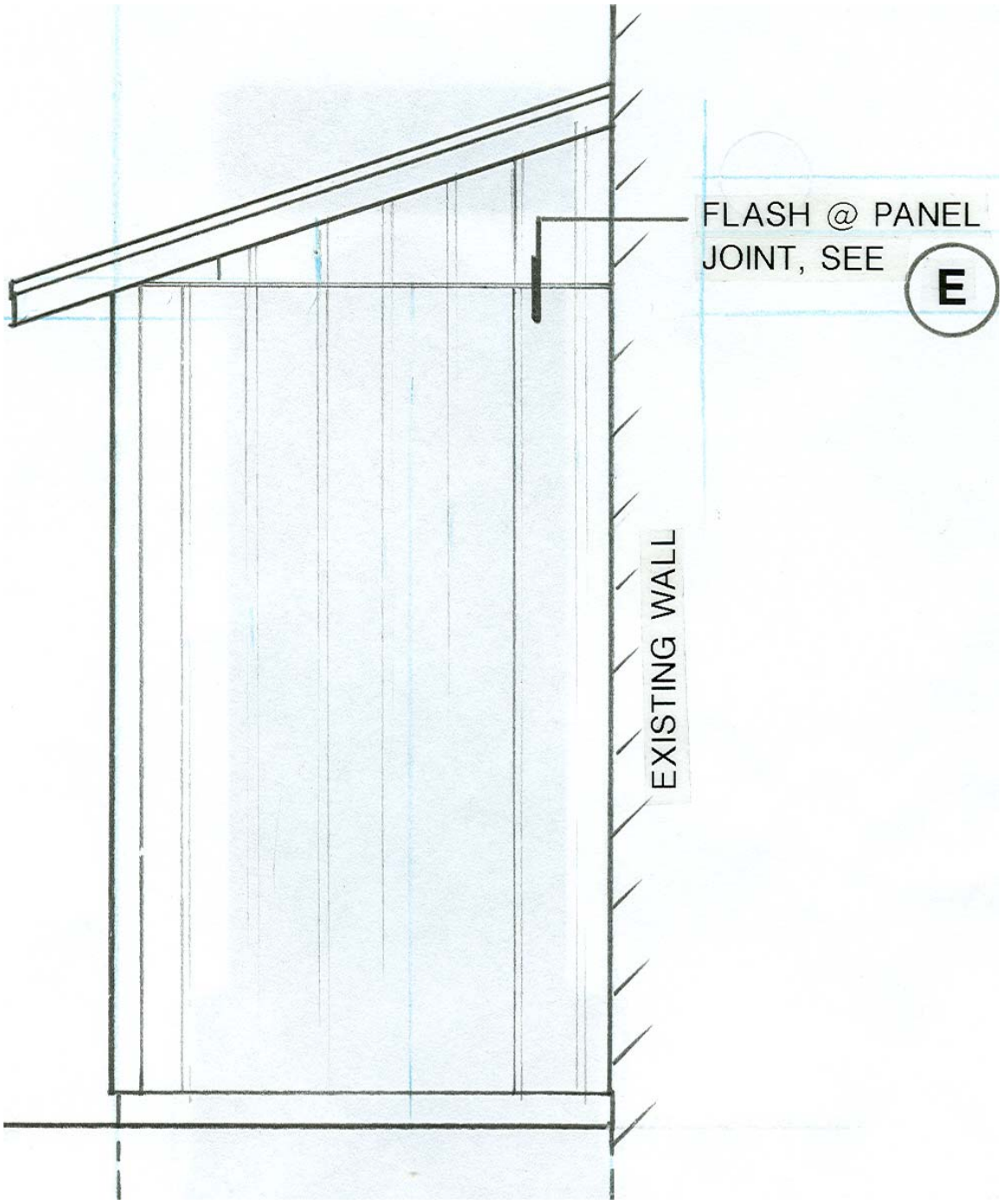
FLASH @ PANEL
JOINT, SEE
E
EXISTING WALL

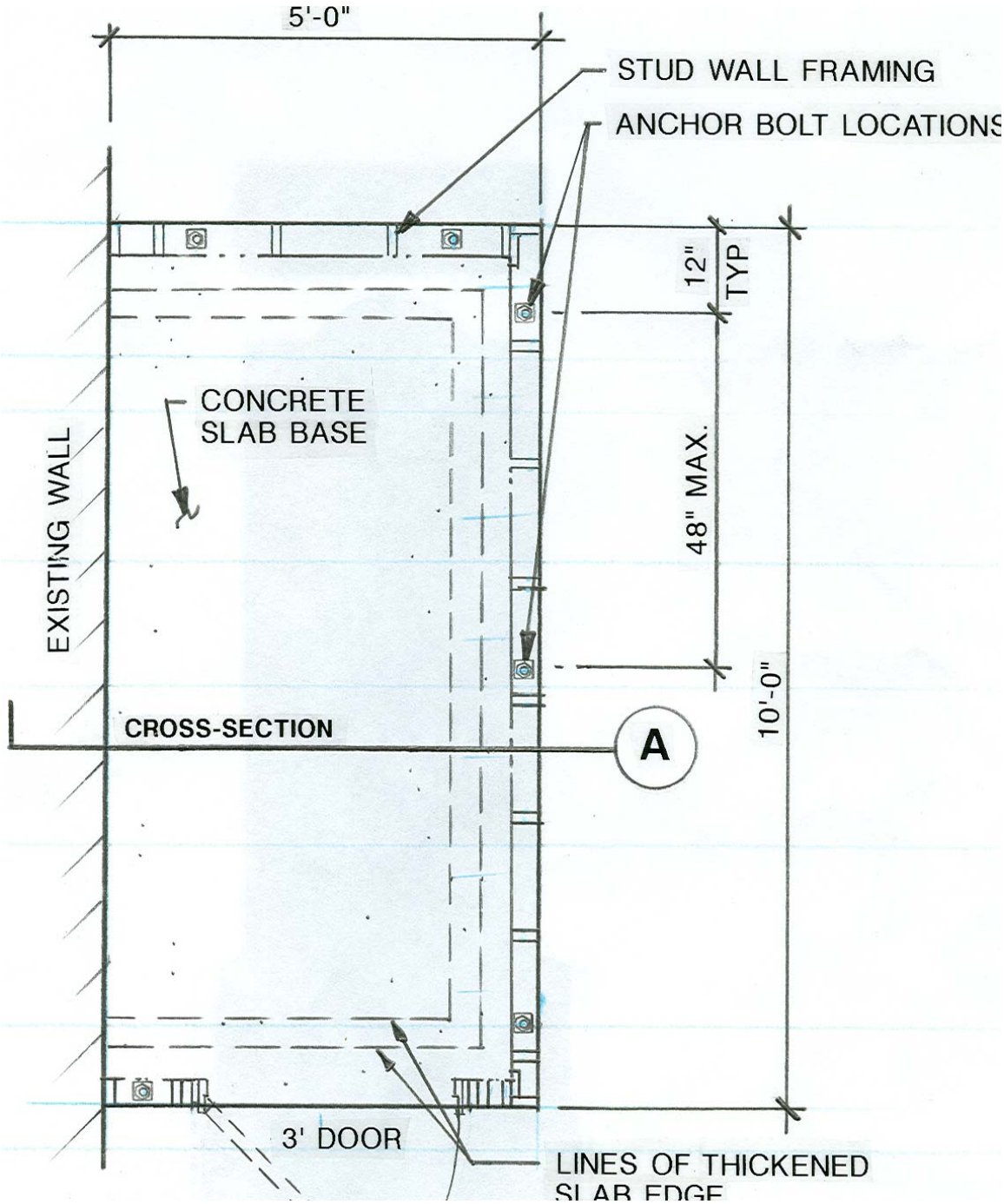
5'-0"
STUD WALL FRAMING
ANCHOR BOLT LOCATIONS
12"
TYP
CONCRETE
SLAB BASE
EXISTING WALL
48" MAX.
10'-0"
CROSS-SECTION
A
3' DOOR
LINES OF THICKENED
SLAB EDGE

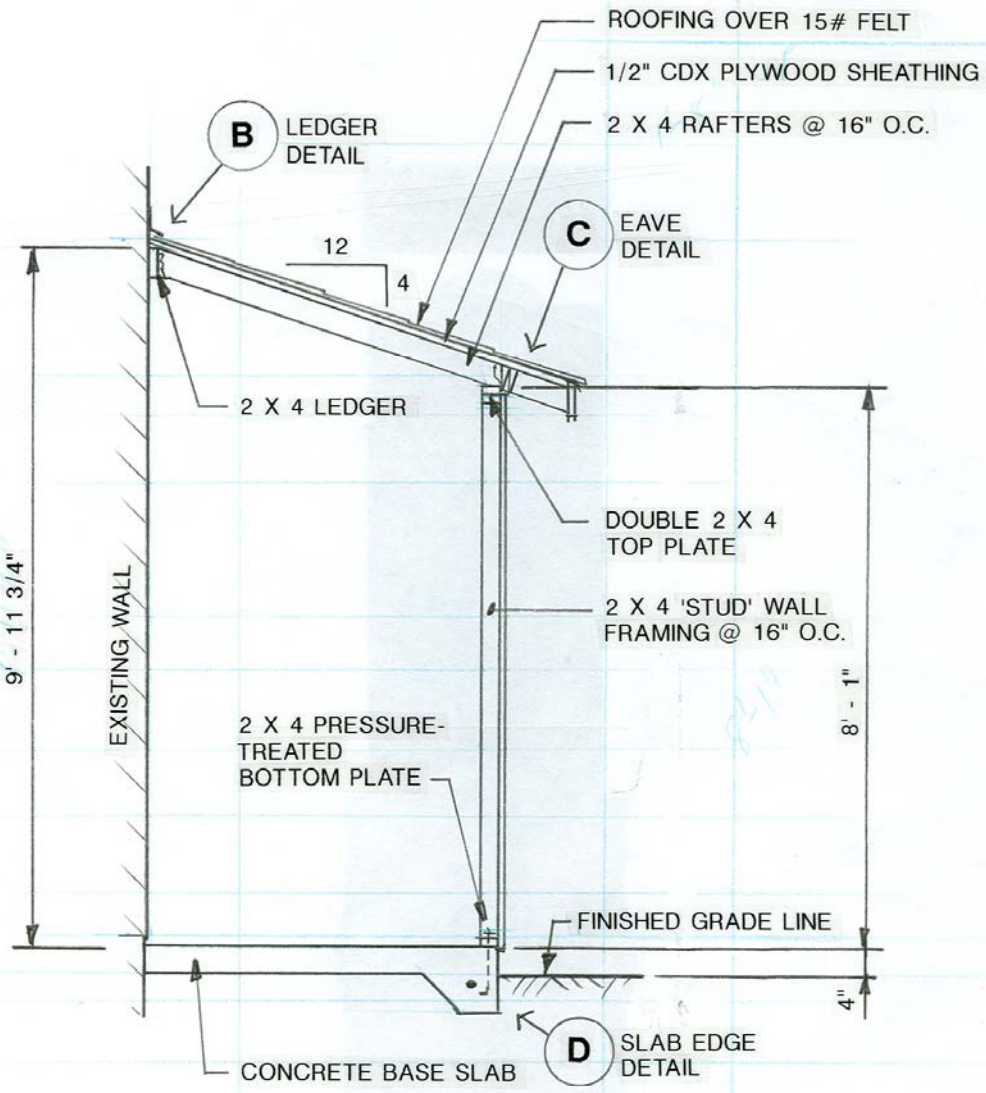

A CROSS-SECTION

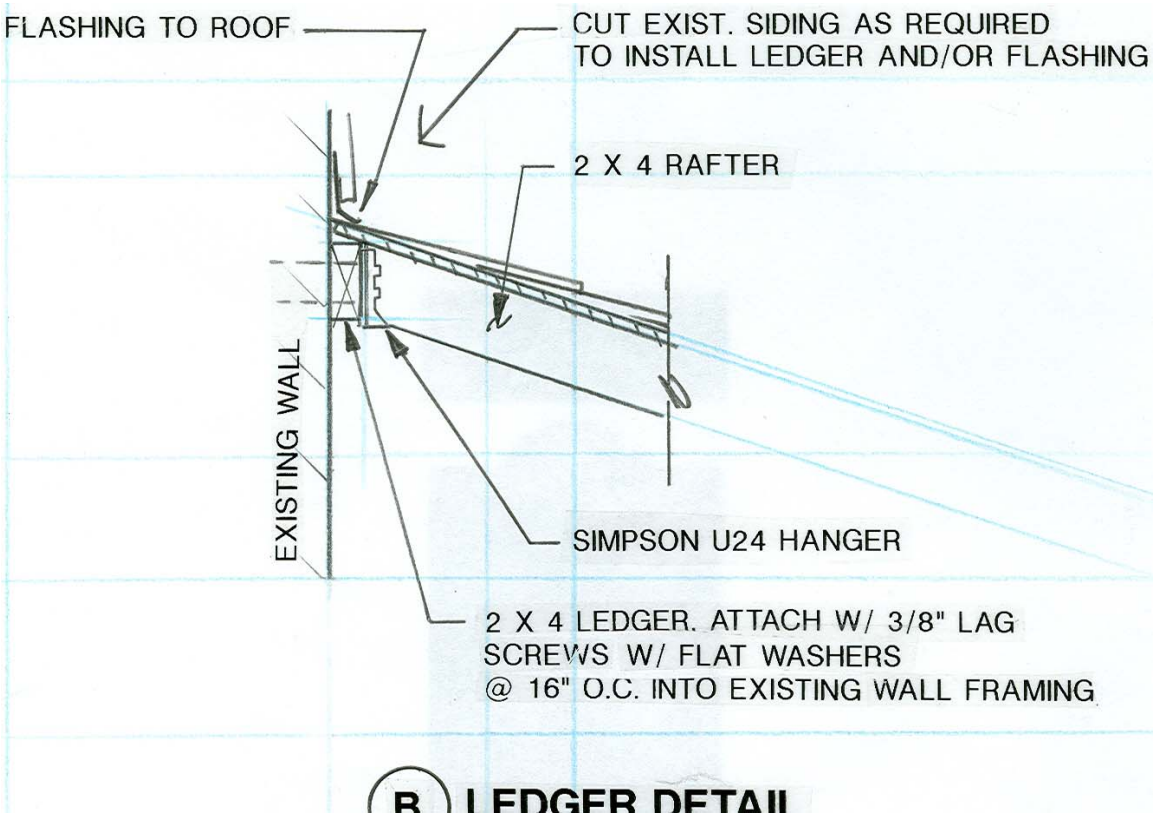

B LEDGER DETAIL

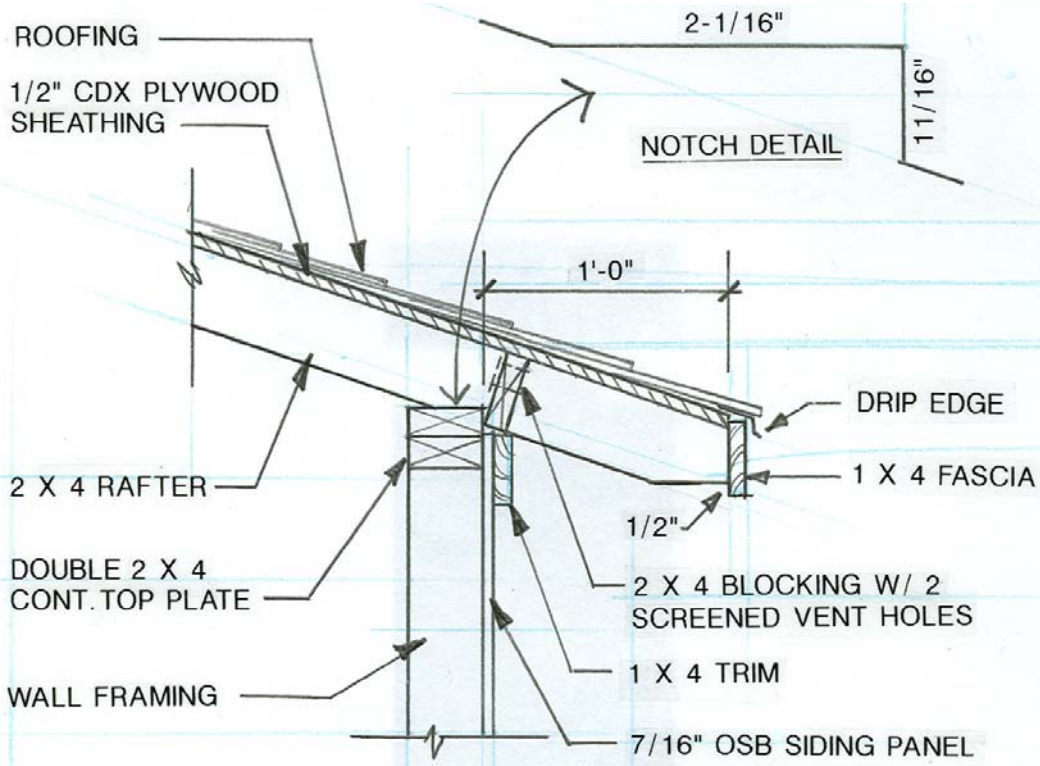

C EAVE DETAIL

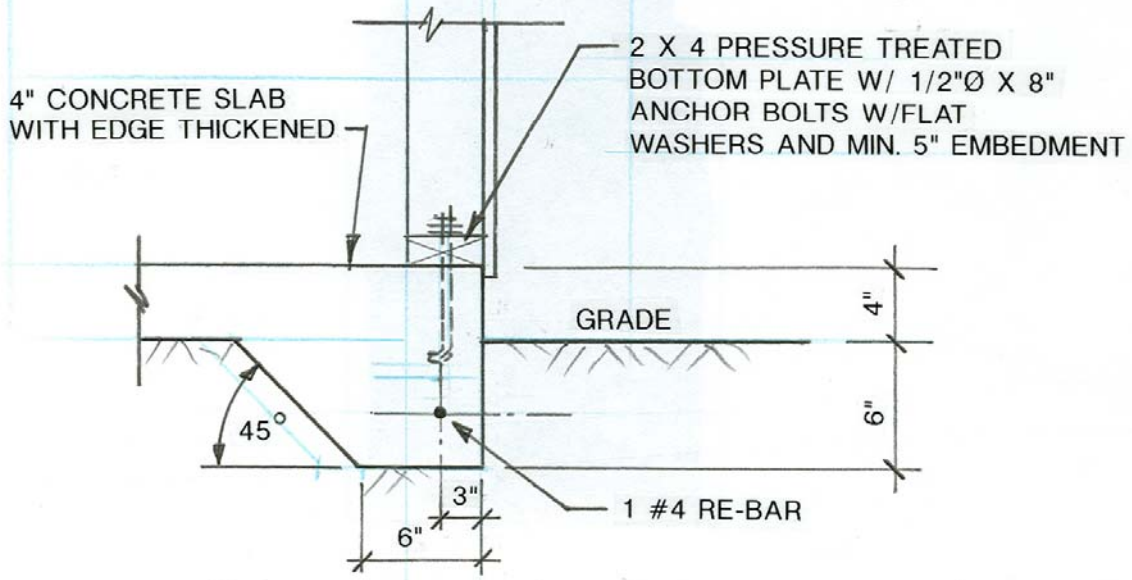

D SLAB EDGE DETAIL

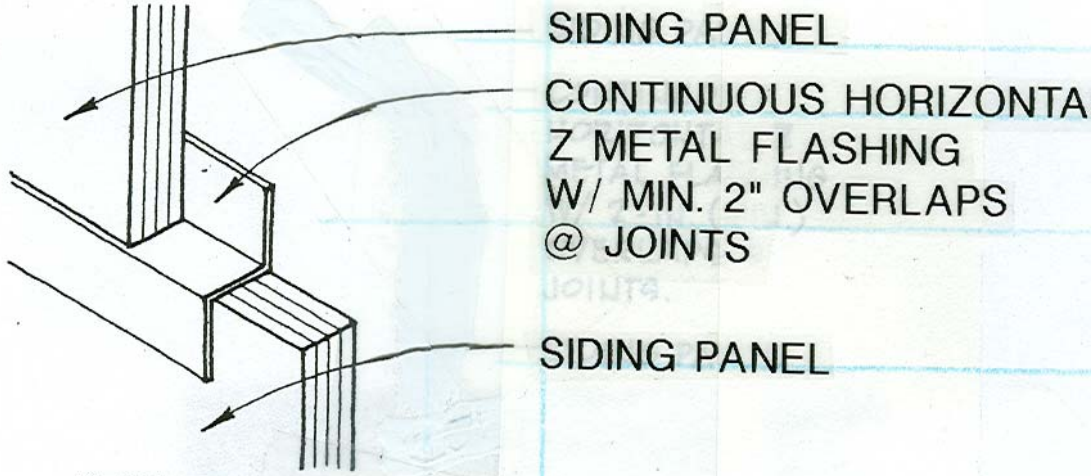

ISOMETRIC

SECTION

(E) FLASHING DETAIL

Become Garage Savvy.

Get the latest in Garage innovation

@

www.Garagez.com